| SE | SWEDEN |
| --- | --- |

# Diagram / Parts List

## 9565CR

## 125MM ANGLE GRINDER

2024/06

# (SE) 9565CR / 125MM ANGLE GRINDER

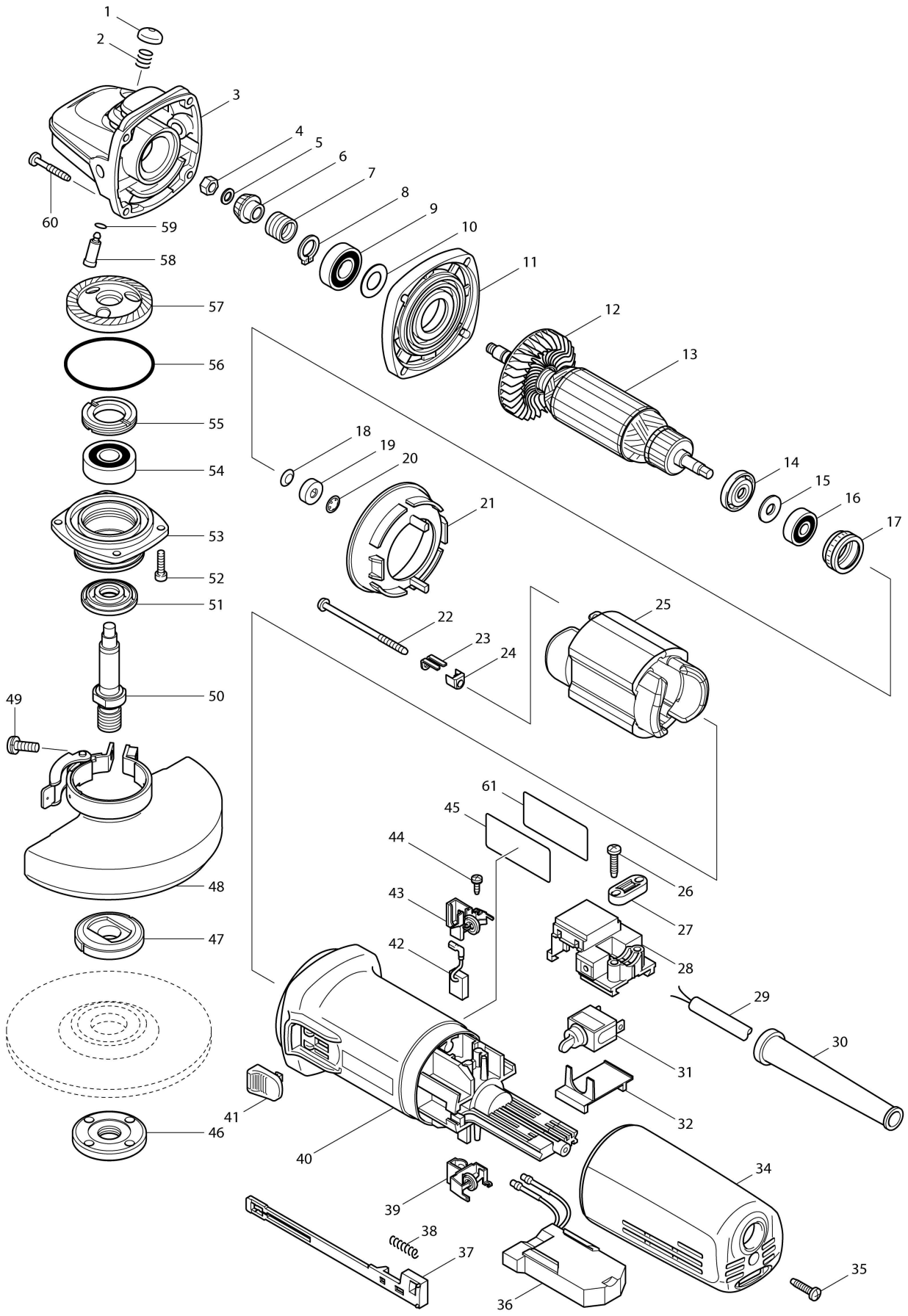

| SE | SWEDEN |
|---|---|

# 9565CR / 125MM ANGLE GRINDER

| Item | Parts No. | Parts Description | Qty | Remark |
|---|---|---|---|---|
| 001 | 418067-8 | PIN CAP | 1 | |
| 002 | 233072-2 | COMPRESSION SPRING 8 | 1 | |
| 003 | 153488-4 | GEAR HOUSING COMPLETE | 1 | |
| 004 | 931303-0 | HEX. NUT M6 | 1 | |
| 005 | 253077-6 | FLAT WASHER 6 | 1 | |
| 007 | 233901-9 | LOCK SPRING 12 | 1 | |
| 008 | 961052-5 | RETAINING RING (EXT) S-12 | 1 | |
| 009 | 211142-7 | BALL BEARING 6001LLB | 1 | |
| 010 | 253084-9 | FLAT WASHER 12 | 1 | |
| 011 | 317359-1 | GEAR HOUSING COVER | 1 | |
| 012 | 240033-5 | FAN 57 | 1 | |
| 013 | 515228-2 | ARMATURE ASS'Y 220-240V | 1 | |
| 014 | 681656-4 | INSULATION WASHER | 1 | |
| 015 | 253823-7 | FLAT WASHER 7 | 1 | |
| 016 | 210027-4 | BALL BEARING 627DDW | 1 | |
| 017 | 421738-8 | LABYRINTH RUBBER RING 22 | 1 | |
| 018 | 267756-0 | WAVE WASHER 6 | 1 | |
| 019 | 688117-5 | MAGNET SLEEVE | 1 | |
| 020 | 259039-2 | SELF LOCK 6 | 1 | |
| 021 | 413076-2 | BAFFLE PLATE | 1 | |
| 022 | 266258-3 | TAPPING SCREW 4X70 | 2 | |
| 023 | 344871-8 | RETAINER | 2 | |
| 024 | 417237-6 | INSULATION COVER | 2 | |
| 025 | 626503-2 | FIELD 220-240V | 1 | |
| 026 | 265995-6 | TAPPING SCREW 4X18 | 2 | |
| 028 | 638635-3 | SWITCH BLOCK | 1 | |
| 029 | 665394-6 | POWER SUPPLY CORD 1.0-2-2.5 | 1 | |
| 030 | 682559-5 | CORD GUARD 8 | 1 | |
| 031 | 651418-4 | SWITCH ST115A-40 | 1 | |
| 032 | 687113-0 | COVER | 1 | |
| 034 | 417185-9 | REAR COVER | 1 | |
| 035 | 265995-6 | TAPPING SCREW 4X18 | 1 | |
| 036 | 631841-9 | CONTROLLER | 1 | |
| 037 | 417186-7 | SWITCH LEVER | 1 | |
| 038 | 233071-4 | COMPRESSION SPRING 4 | 1 | |
| 039 | 643760-7 | BRUSH HOLDER | 1 | |
| 041 | 417813-6 | SWITCH KNOB | 1 | |
| 042 | 191978-9 | A.C. CARBON BRUSH CB-318 | 1 | |
| 043 | 643760-7 | BRUSH HOLDER | 1 | |
| 044 | 266256-7 | TAPPING SCREW PT3X10 | 4 | |
| 045 | 866176-1 | 9565CR NAME PLATE | 1 | |
| 046 | 224554-5 | LOCK NUT 14-45 | 1 | |
| 047 | 224415-9 | INNER FLANGE 42 | 1 | |
| 050 | 324035-0 | SPINDLE | 1 | |
| 051 | 415300-9 | LABYRINTH RING | 1 | |
| 052 | 265490-6 | HEX. SOCKET HEAD BOLT M4X16 | 4 | |
| 054 | 211129-9 | BALL BEARING 6201DDW | 1 | |
| 055 | 285841-7 | BEARING RETAINER | 1 | |
| 056 | 213673-2 | O RING 52 | 1 | |
| 058 | 256459-1 | PIN | 1 | |
| 059 | 213048-5 | O RING 6 | 1 | |
| 060 | 266257-5 | TAPPING SCREW 4X28 | 4 | |